ARB FITTING INSTRUCTIONS

JULY 1991

RANGE ROVER WINCH BULL BAR

PART NO. 3430020

WARNING

THIS BULL BAR MUST NOT BE FITTED TO AIRBAG EQUIPPED VEHICLES. FITMENT TO AIRBAG EQUIPPED VEHICLES MAY INTERFERE WITH THE PROPER OPERATION OF THE AIRBAGS AND MAY RESULT IN SERIOUS INJURY.

TAKE NOTE OF THE FOLLOWING:

- **THIS PRODUCT MUST BE INSTALLED EXACTLY AS PER THESE INSTRUCTIONS USING ONLY THE HARDWARE SUPPLIED.**
- **IN THE EVENT OF DAMAGE TO ANY BULL BAR COMPONENT, CONTACT YOUR NEAREST AUTHORISED ARB STOCKIST. REPAIRS OR MODIFICATIONS TO THE IMPACT ABSORPTION SYSTEM MUST NOT BE ATTEMPED.**
- **DO NOT USE THIS PRODUCT FOR ANY VEHICLE MAKE OR MODEL, OTHER THAN THOSE SPECIFIED BY ARB.**
- **DO NOT REMOVE LABELS FROM THIS BULL BAR.**
- **THIS PRODUCT OR IT'S FIXING MUST NOT BE MODIFIED IN ANY WAY.**

If you have any queries regarding the installation of this product please contact the distributor from whom it was purchased, or alternatively the ARB office in your state.
Head Office – ARB Corporation Ltd VIC: 42-44 Garden Street, Kilsyth, Victoria, 3137 Tel: (03) 9761 6622 Fax: (03) 9761 6807
WA: (08) 9244 3553 **NSW:** (02) 9821 3633 **ACT:** (02) 6280 7475 **SA:** (08) 8244 5001 **QLD:** (07) 3872 3872 **NT:** (08) 8947 2262 **TAS:** (03) 6331 4190

TOOLS REQUIRED -

Basic Took Kit
1/2" Capacity drill & 1/2" drill bit
Jigsaw for vehicles with spoiler.

PROCEDURE - REFER TO WINCH FITMENT DETAILS BEFORE PROCEEDING.

1. Remove original bumper bar, stays and registration plate. Remove front spoiler if fitted.

2. Lift bull bar into position on chassis rails and align mounting holes.

3. Fit 4 off 4 1/2" x 1/2" bolts to the 4 holes closest to the bull bar. Fit washers, spring washers, nuts and tighten.

4. Using bull bar as guide, drill the 2 remaining holes out to 1/2" and fit 4 1/2" x 1/2" bolts using 70mmx 40mm special washers provided. See diagram below. Fit washers, spring washers, nuts and tighten.

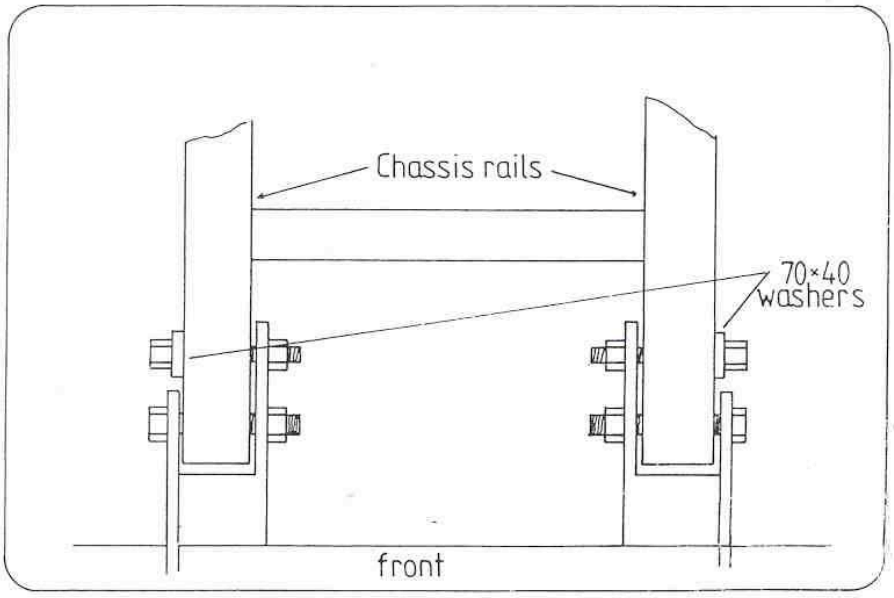

PART NO. 3430020

5. For vehicles fitted with front spoiler, modify the spoiler as per diagram below using jigsaw, and refit to pre-welded brackets behind bull bar using:
   - 4 - 1 1/4" x 3/8" UNC bolts, nuts, washers and spring washers.
   - 2 - 1 1/2" x 1/2" UNC bolts, nuts, washers and spring washers.
   - 2 - 50 x 50 x 14mm square washers (for centre holes of spoiler brackets)

6. Refit registration plate and fit rubber grommets to holes in body now exposed, ie: where the bumper bar rubber and caps originally attached to.

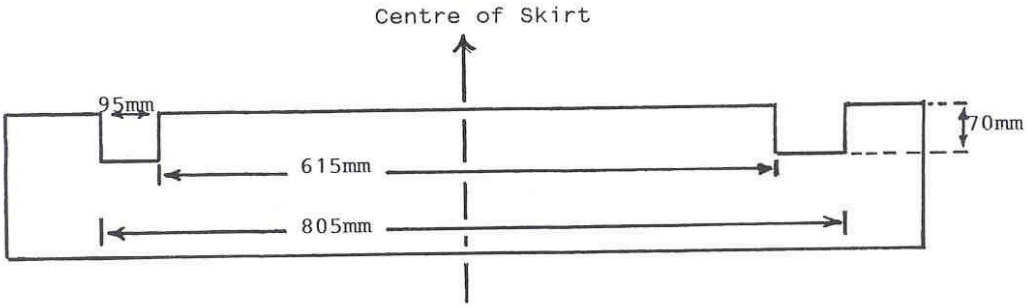

CUT OUT DIMENSIONS FOR PLASTIC SKIRT

WINCH AND ROLLER FAIRLEAD FITMENT

New mounting holes must be drilled in the roller fairlead to line up with winch mounting holes in bull bar.

1. Remove circlips which retain side pins.

2. Remove side pins and side rollers from roller fairlead.

PART NO. 3430020

3. Position roller fairlead hard up against roller fairlead bracket.

4. From rear of bar using holes in bull bar as a guide, mark out new hole positions on roller fairlead and drill out to 1/2"

5. Position winch on top of a 20 litre or 60 litre drum with the winch mounting holes facing upwards. Remove winch control box from winch, and replace winch to control box cables with new cables provided. On the 10,000lb winch models, the thermal cut out wire will also need to be extended with cable and insulating green sleeve provided. Do not refit control box to winch.

6. On 8000lb and 9000lb winch models, a spacer kit will be required Pt. No. 3500020. This spacer kit moves the winch back 8mm to allow installation. See separate instructions.

7. Place the bull bar on top of the winch and align mounting holes. Using bolts supplied from winch kit and 7/16" washers supplied in ARB kit, fit and finger tighten the 2 upper bolts.

8. Place roller fairlead in position over two lower holes, insert bolts and finger tighten.

9. Ensure winch and roller fairlead are aligned and tighten all bolts.

10. Refit winch control box to welded on tag on bull bar.

11. Using 6" bolts supplied, place a flat washer under the head of both bolts and insert bolts through roller fairlead bracket and side rollers. Fit nyloc nuts and tighten so that rollers turn freely.

12. Fit bull bar to vehicle following procedure on page 1.

13. Wire up winch as per winch manual instructions.

14. Check operation of winch as per winch manual.

UNDER NO CIRCUMSTANCES IS THE WINCH TO BE USED BEFORE THE OWNER'S MANUAL HAS BEEN READ AND UNDERSTOOD. FAILURE TO COMPREHEND THE MANUAL CONTENTS COULD RESULT IN OPERATOR DANGER AND WINCH FAILURE.