RING AND PINION

INSTALLATION INSTRUCTIONS

Congratulations on your purchase of a new G/2 Ring and Pinion set. This gear set has been manufactured to provide extended gear life when properly installed in the correct application.

PLEASE READ THE FOLLOWING:

Ring and pinion sets are not just installed, they are set up using shims and or adjusters to achieve a proper "contact pattern." The difference between a correct set up and an incorrect set up can be measured in thousandths of an inch. (.001), resulting in either quite, extended gear life, or noisy, premature wear, and failure. Because of this, G/2 Axle & Gear strongly recommends this gear set be professionally installed. Should you prefer to do the installation yourself, please read these instructions carefully. Depending on your experience, you may want to have a factory service manual available during the install.

All ring and pinion sets are manufactured as a matched pair. The ring and pinion should never be mixed with another gear set, as they have been lapped together for optimum strength and quiet operation. The ring gear and the pinion gear will have matching "hand etched" numbers engraved on them for verification.

TOOL LIST

When installing your ring & pinion, a wide variety of tools will be required, and some will help simplify the job. It is always recommended that the correct tools are used for the job. The use of correct tools will help prevent parts from getting damaged, and save time. The following is a list of tools that you may need:

- Eye protection
- Dial indicator with magnetic stand
- Gear marking compound and brush (Supplied in Installation Kits)
- Calipers or micrometer
- Bearing puller
- Bearing press
- Three foot long breaker bar or strong impact gun
- Pinion nut socket
- Ring gear bolt socket
- Carrier cap bolt socket
- Six point cross pin bolt wrench
- Brake line wrench
- Pry bars for removing the carrier case
- 24 oz ball peen hammer
- 48 oz sledge hammer
- 48 oz plastic dead blow hammer
- Brass punch
- Punch for marking carrier caps
- Oil drain pan
- Foot pounds torque wrench
- Inch pounds torque wrench
- OPTIONAL: Pinion depth setting tool (see step 2)

If installing gears with the axle housing in the vehicle-USE JACK STANDS or an approved hoist! =SAFETY FIRST=

Verify ratio before disassembly.

Please properly recycle all used gear oil.

Disassembly

1. Prior to disassembly always make sure you have everything required to finish the job. Check all new part to confirm that you have the correct parts that you ordered, and that they have not been damaged during shipping.
2. Begin by lifting the vehicle with the appropriate lift or jack. Use proper jack stands to support the vehicle.
3. Drain the oil and dispose of properly. Preferably at a recycling center near you.
4. Remove axle shafts.
5. Mark both bearing caps to ensure proper reassembly.
6. Remove the old gear set and clean the carrier and housing assembly thoroughly (including the axle tubes).
7. Make note of the position and thickness of the original shims. This will be helpful during the installation process.
8. Inspect all parts for excessive wear or damage and replace if necessary. You may want to pay particular attention to your wheel bearings and axle shafts at this point, especially on c-clip type axles as they are prone to wear.
9. Clean all parts that will be reused in the assembly process with clean solvent. You may want to pay close attention to the oil passages to the pinion bearings and the axle tubes as metal particles and dirt can collect in these areas.

Pre-Assembly

1. Clean the new ring and pinion gear set to remove any protective coating and /or packing material.
2. After cleaning, dry all parts with an air supply, making sure to not spin the bearings with compressed air (USE EYE PROTECTION).

3. Inspect the tooth areas of both gears for any small chips that may have occurred during shipping. Dress with a small fine file as needed.
4. Examine the mounting surface of the ring gear and the mating surface of the carrier for any nicks, burrs or irregularities that might prevent a flush mounting of the ring gear. Ring and pinion tooth depth and backlash variations can result from a ring gear that is "cocked" on the carrier mounting surface.
5. Mount the ring gear to the carrier carefully, making sure there are no burrs created between the two surfaces. Check ring gear bolts for proper length, Use a very small amount of thread locking compound on the ring gear bolt threads and torque to specs.
6. Clean all seal surfaces with a fine emery cloth, and wipe clean.

Assembly

During the ring & pinion installation, there are four primary adjustments that will need to be made.

1. Pinion Depth – The distance from the face of the pinion gear to the centerline of the ring gear. This is adjusted by adding or subtracting shims to the inner pinion bearing.

2. Pinion Bearing Preload-The preload applied to the pinion bearings when the pinion nut is tightened. This is adjusted by shims and/or a crush sleeve.

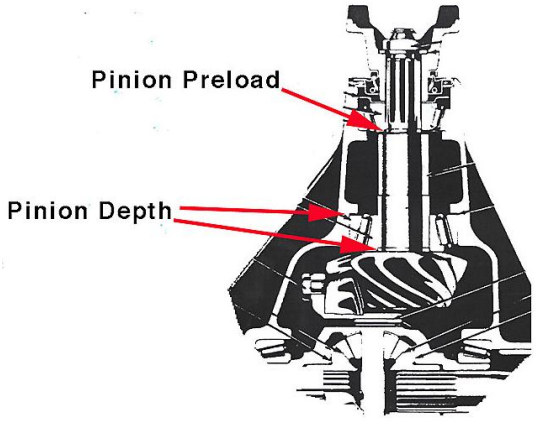

Pinion depth is controlled by shims. Shims may be located between the Inner pinion bearing & pinion head or they may be between the inner Pinion bearing cone and carrier housing. In either case removing a shim will Move the pinion away from the center line of the ring gear while adding a shim will move it toward the centerline

3. Backlash – The distance between the mating surfaces of the ring and pinion gears. Adjusted by moving the ring gear inward or outward from the pinion gear by shimming the carrier.
4. Carrier bearing preload – The preload applied to the carrier bearings when installed in the axle housing.

1. **Setup <u>Without</u> Pinion Depth Setting Tool**
   In order to obtain the correct set up without a pinion depth setting tool, the following procedure is suggested:
   a. Unless otherwise instructed, start with the original pinion depth shim. On most rear ends this will require a bearing puller such as (G2 80-BRGPLLR) to remove the old pinion bearing from the original pinion.
   b. Press the new bearing on the new pinion shaft using the original shim.
   c. After replacing the pinion races, install the new pinion into the housing without a crush collar/preload shims and without the pinion seal.
   d. Use the old pinion nut to secure the yoke and tighten to obtain the factory specified preload.
   e. Tap on the yoke a few times to ensure that the races are fully seated and recheck your pinion preload tighten the nut to reset the preload to factory specs.
   f. Install the carrier to fit snugly in the housing and set the backlash to approximately .008" to .010" by changing the carrier shims (or adjusters) on each side as required.
   g. You can now check the tooth pattern by using marking compound on the ring gear teeth. Add or subtract pinion depth shims in increments of .003" to obtain a new pattern.
   h. Adjust carrier shims to obtain the proper backlash specified for your application when making pinion depth changes.
   i. Refer to the desired pattern as indicated in the Tooth Contact Pattern chart.
   j. After the proper pattern has been established, you can remove the carrier, remove the pinion, and install the crush sleeve and or preload shim stack along with a new pinion seal and nut. (use thread locker on the nut)Set pinion preload to factory specs.
   k. Reinstall the carrier assembly and recheck the backlash, pattern, and carrier preload. Torque main caps to factory specs.

2. **Setup <u>With</u> Pinion Depth Setting Tool**

   a. Start by installing the pinion in the housing as per the pinion depth dimensions. This depth is obtained by using pinion shims behind the inner pinion bearing or behind the inner pinion race or between the pinion support and the case (Ford 9" and GM 10.5")
   b. See figure 1. The thickness of the pinion shims is determined by using a pinion depth setting tool measure the checking distance. Obtaining the correct pinion depth is very critical.

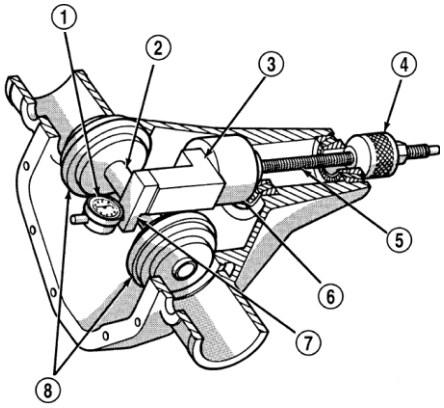

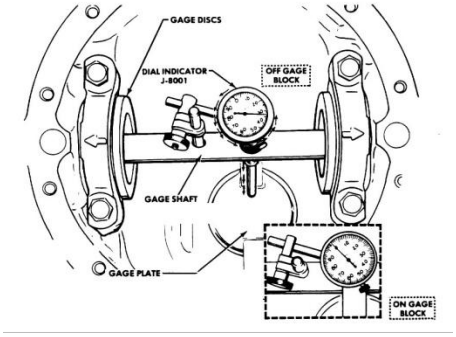

J9403-45

   c. After obtaining the correct pinion depth setting, install a new crush collar, outer pinion bearing, pinion seal, yoke and new pinion nut. (NOTE: do not reuse a crush collar or pinion nut).
   d. Torque the pinion nut to the crush collar and establish the correct pinion preload. It requires approximately 180ft./lb of torque to begin to crush the collar. Once the nut has become tight and all endplay has been removed, slowly continue to tighten the nut and crush the collar until the proper preload has been established. (CAUTION: The preload is measured in INCH PUONDS) Do not over tighten the crush collar. If this occurs a new collar MUST be installed and the procedure repeated.

3. Adjusting Backlash
    a. After the pinion is properly installed, install the carrier assembly in the housing. Be sure the carrier bearings and races are fully seated and that the entire assembly, with shims, fits snugly in the housing.
    b. Mount a dial indicator on the housing in a matter that will allow the plunger to travel in the same plane as the ring gear. While holding the pinion stationary, move the ring gear back and forth and observe the dial indicator. The total movement is the backlash. Measure and record the backlash in three places equally spaced around the ring gear. This will provide you with an accurate backlash reading.

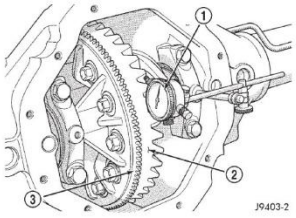

Fig. 10 Ring Gear Backlash

    c. Adjust backlash to specs using the carrier shims or adjusters. A total backlash variance of .003" is acceptable.

4. As a final step you must check the tooth contact pattern with marking compound to assure that the specifications produced the correct patterns. (Refer to the pattern chart)

AXLE "PINION-TO -RING" GEAR TOOTH CONT ACT PATTERNS

Condition:
- Pinion depth correct.
- Backlash incorrect – too much clearance between the pinion and ring gears.

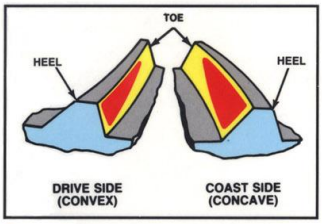

Correction:
Increase the thickness of the left (ring gear side) shim and decrease the thickness of the right shim an equal amount.

Service Hints:
How to check patterns:
- Brush gear marking compound on the ring gear teeth.
- Apply brakes so that 50 lb. ft. is needed to rotate the pinion.
- Rotate the pinion six times clockwise and six times counterclockwise.
- Observe the tooth contact pattern and make any necessary corrections.

Condition:
- Pinion depth correct.
- Backlash correct.

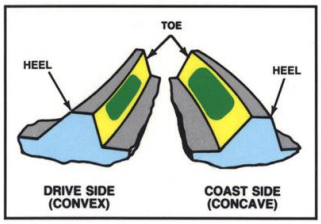

Correction:
None.

Service Hints:
Patterns that vary may be caused by loose bearings on the pinion or the differential case.
Check these bearing preload settings:
- Total assembly
- Differential case
- Pinion

If these settings are good, look for damaged or incorrectly assembled parts.

Condition:
- Pinion depth correct.
- Backlash incorrect – too little clearance between the pinion and ring gears.

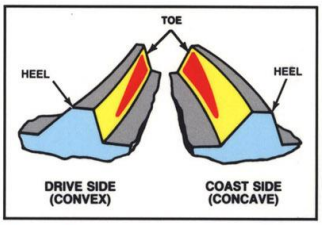

Correction:
Increase the thickness of the right shim and decrease the thickness of the left (ring gear side) shim.

Service Hints:
Side bearing shim locations:
- Between the side bearing cones and the differential case
- Between the side bearing cups and the rear axle housing

AXLE "PINION-TO-RING" GEAR TOOTH CONTACT PATTERNS

Condition:
- Backlash correct.
- Pinion depth incorrect – pinion gear is too far away from ring gear.

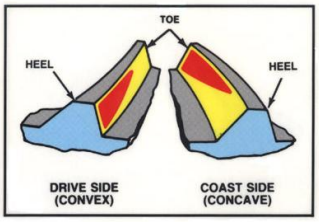

Correction:
Increase the pinion shim thickness.

Service Hints:
How to check patterns:
- Brush gear marking compound on the ring gear teeth.
- Apply brakes so that the pinion can be rotated with 50 lb. ft. effort.
- Rotate the pinion six times clockwise and six times counterclockwise.
- Observe the tooth contact pattern and make any necessary corrections.

Condition:
- Backlash correct.
- Pinion depth correct.

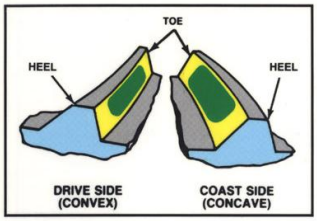

Correction:
None.

Service Hints:
Patterns that vary may be caused by loose bearings on the pinion or the differential case.
Check these bearing preload settings:
- Total assembly
- Differential case
- Pinion

If these settings are good, look for damaged or incorrectly assembled parts.

Condition:
- Backlash correct.
- Pinion depth incorrect – pinion gear is too close to ring gear.

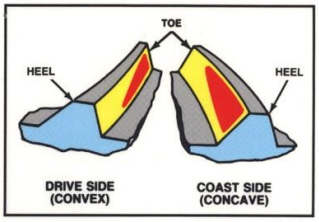

Correction:
Decrease the pinion shim thickness.

Service Hints:
Pinion depth shim locations:
- Between the inner pinion bearing cone and the head of the pinion gear
- Between the inner pinion bearing cup and the rear axle housing

Break In Procedure

All gear sets require a brief break in procedure to ensure long life and quiet operation. The following is recommended before any heavy load and or constant use: Insure the housing is filled to the correct level using the proper lubricant (including additives if required).

1. Bring axle to operating temperature by driving (unloaded) for approximately 15 to 20 minutes. Do not create any heavy shock loads.
2. Let the axle assembly cool completely.
3. For the next 200 miles of operation, drive normally, without any heavy loads.
4. If trailer towing is intended, an additional 200-300 mile break in without trailer is required. This is important! To properly break in a new set of gears, a minimum of 500 miles of driving is essential before constant towing.
5. Change the gear oil after the first 500 miles to remove any metal particles that come from breaking in a new gear set.

IF THIS PROCEDURE IS NOT FOLLOWED, OVERHEATING AND EVENTUAL GEAR AND/OR BEARING FAILURE MAY RESULT.